ALL-VISE ACCESSORY KIT

INSTRUCTIONS • #006-293

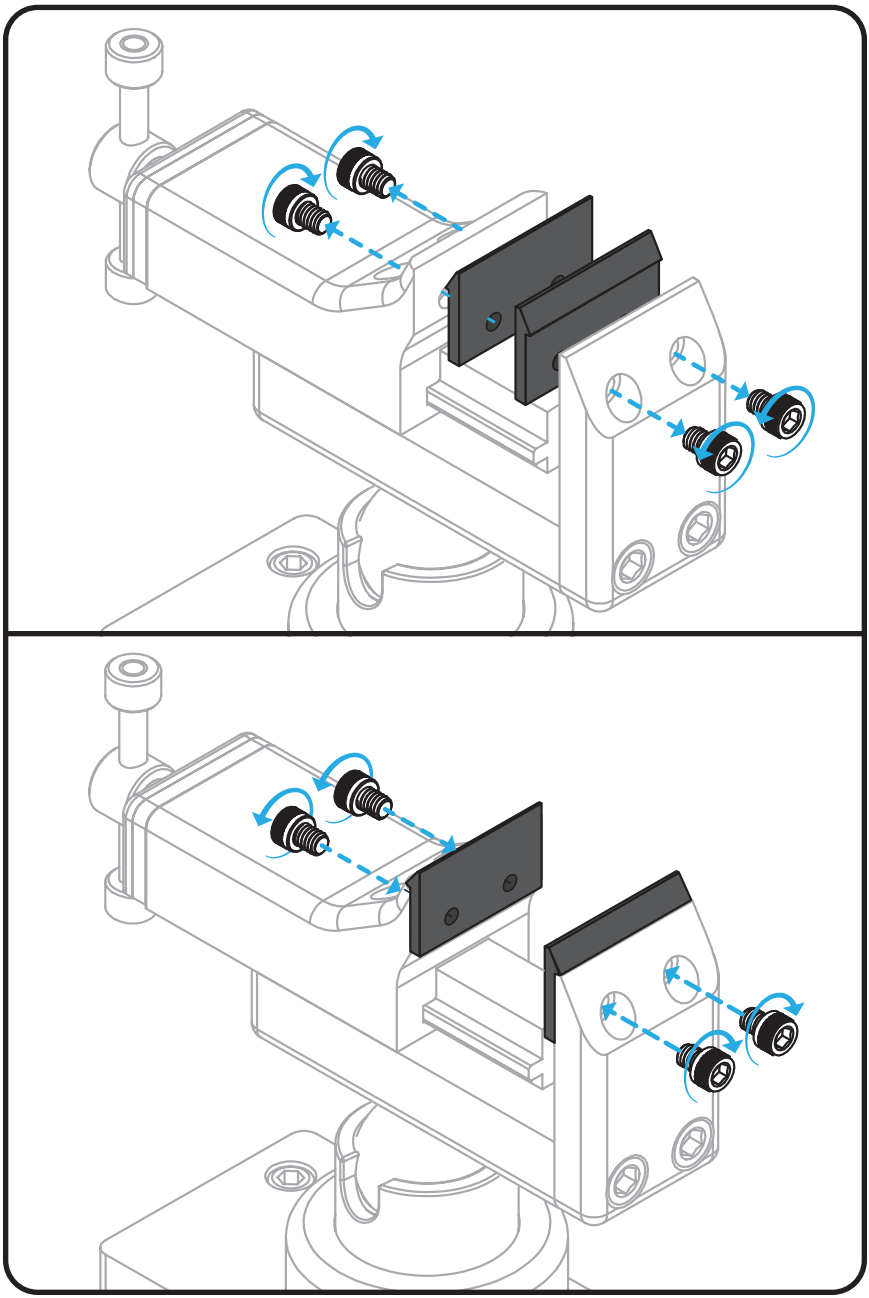

PARTS LIST

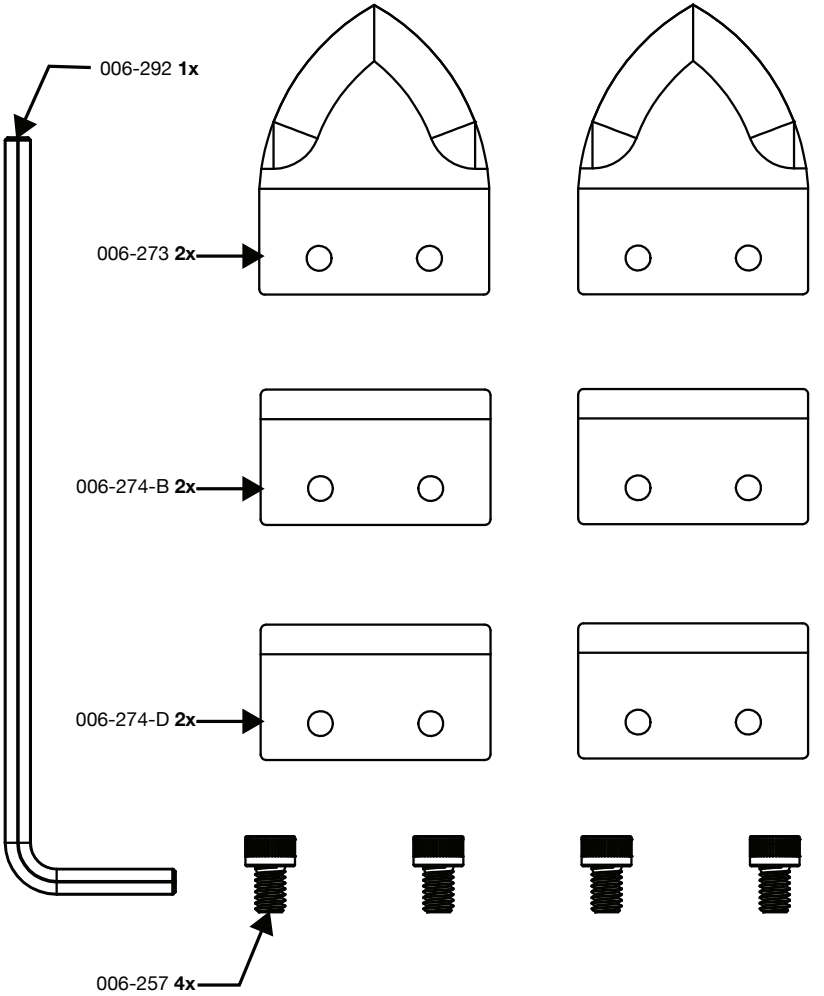

PART NO.	QTY.	DESCRIPTION
006-257	4	SCREW
006-273	2	POINTED JAW INSERT
006-274-B	2	BRASS JAW INSERT
006-274-D	2	DELRIN JAW INSERT
006-292	1	9/64" WRENCH

GLENDO LLC
900 Overlander Road • Emporia, KS 66801 USA
800-835-3519 • 620-343-1084 • Fax: 620-343-9640
hello@grs.com • grs.com
LIT-612 Last Updated: 11/17/2026