ALL-VISE

INSTRUCTIONS • #006-260

INSTALLATION

OPTION 1: FIXED MOUNTING PLATE

FIXED MOUNTING PLATE #004-557
Sold Separately

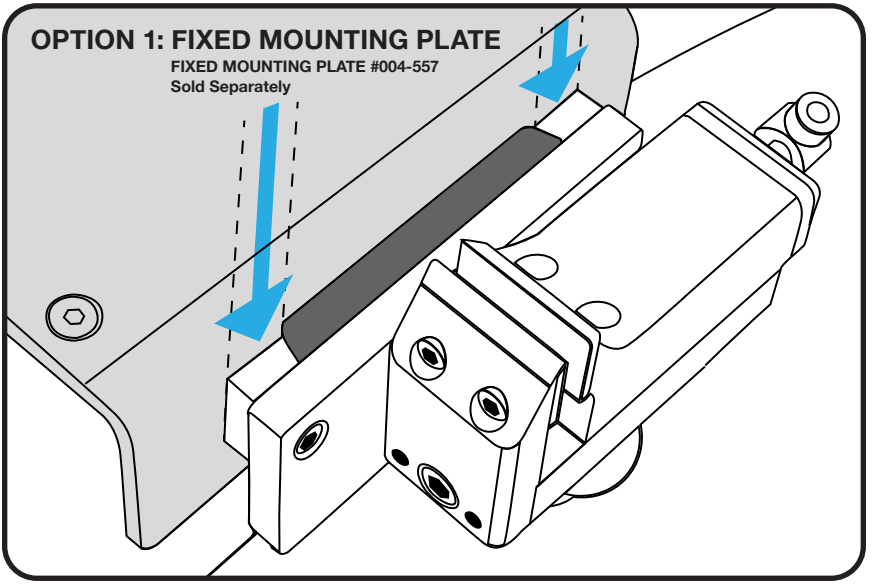

OPTION 2: ATTACH DIRECTLY TO BENCH/TABLE

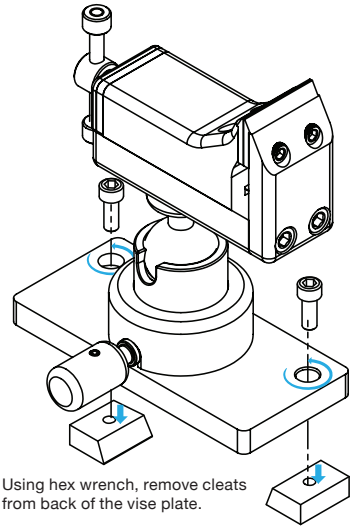

Using hex wrench, remove cleats from back of the vise plate.

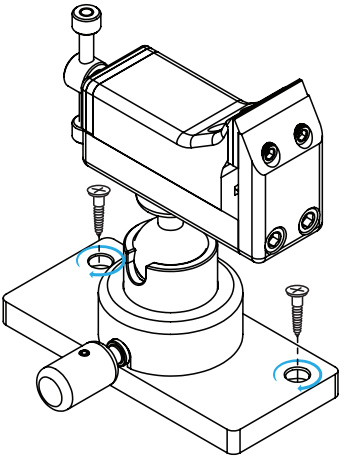

Attach All-Vise to bench or table using appropriately-sized screws (not included).

OPEN/CLOSE JAWS

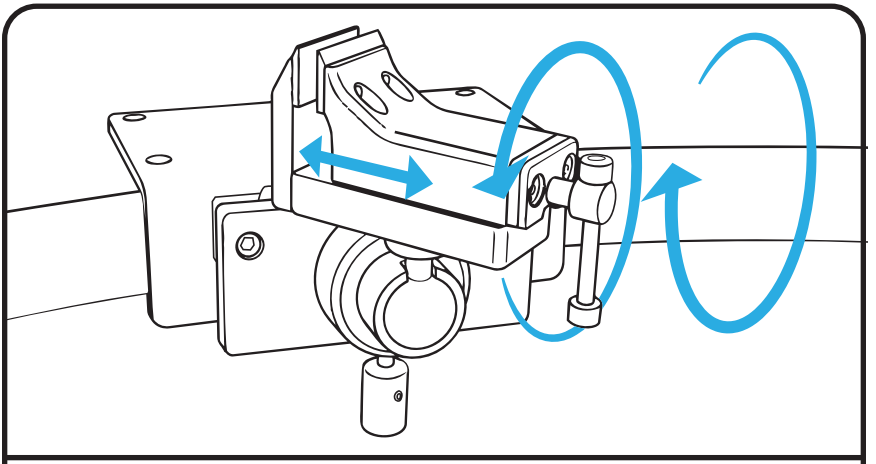

IMPORTANT NOTE:
It is not recommended to open the jaws beyond the threaded block. Doing so will require the vise to be reassembled.

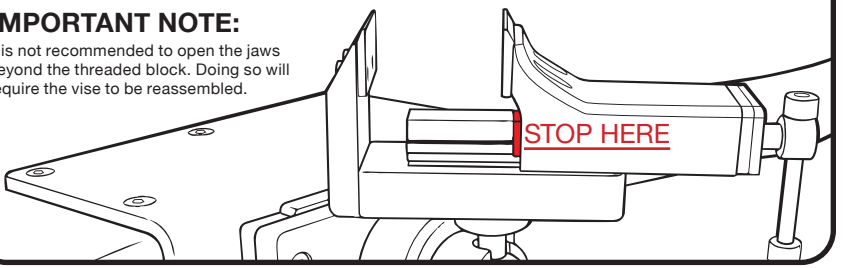

POSITIONING

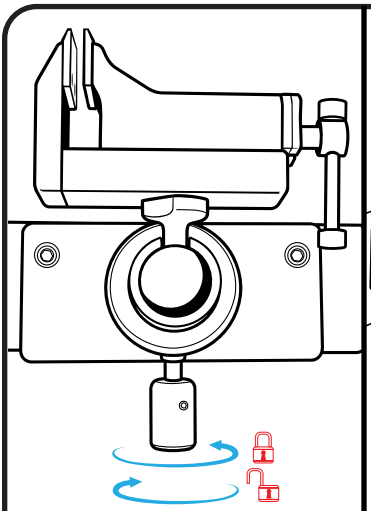

Lock/Unlock using knob at bottom.

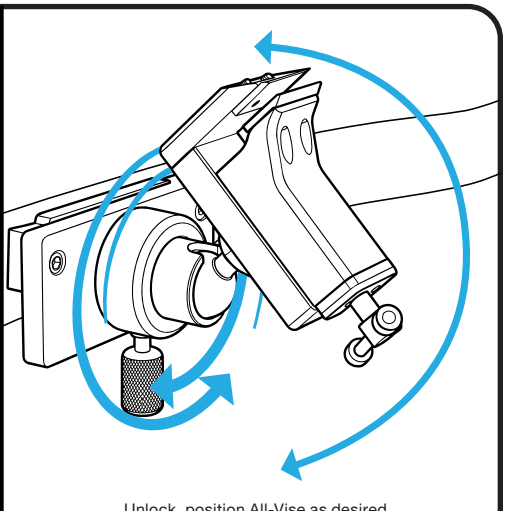

Unlock, position All-Vise as desired and lock using knob.

REPLACE JAWS

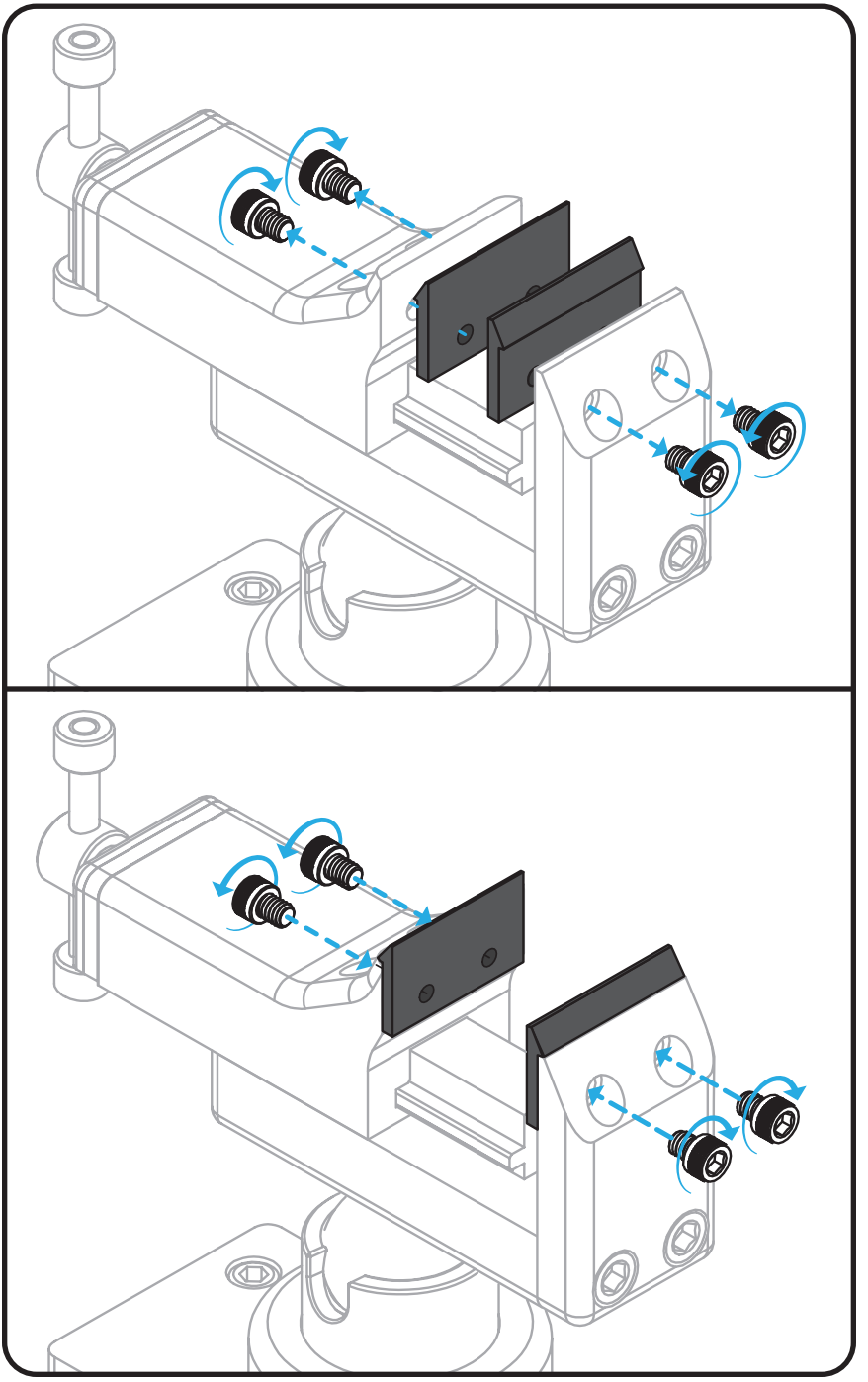

PARTS LIST

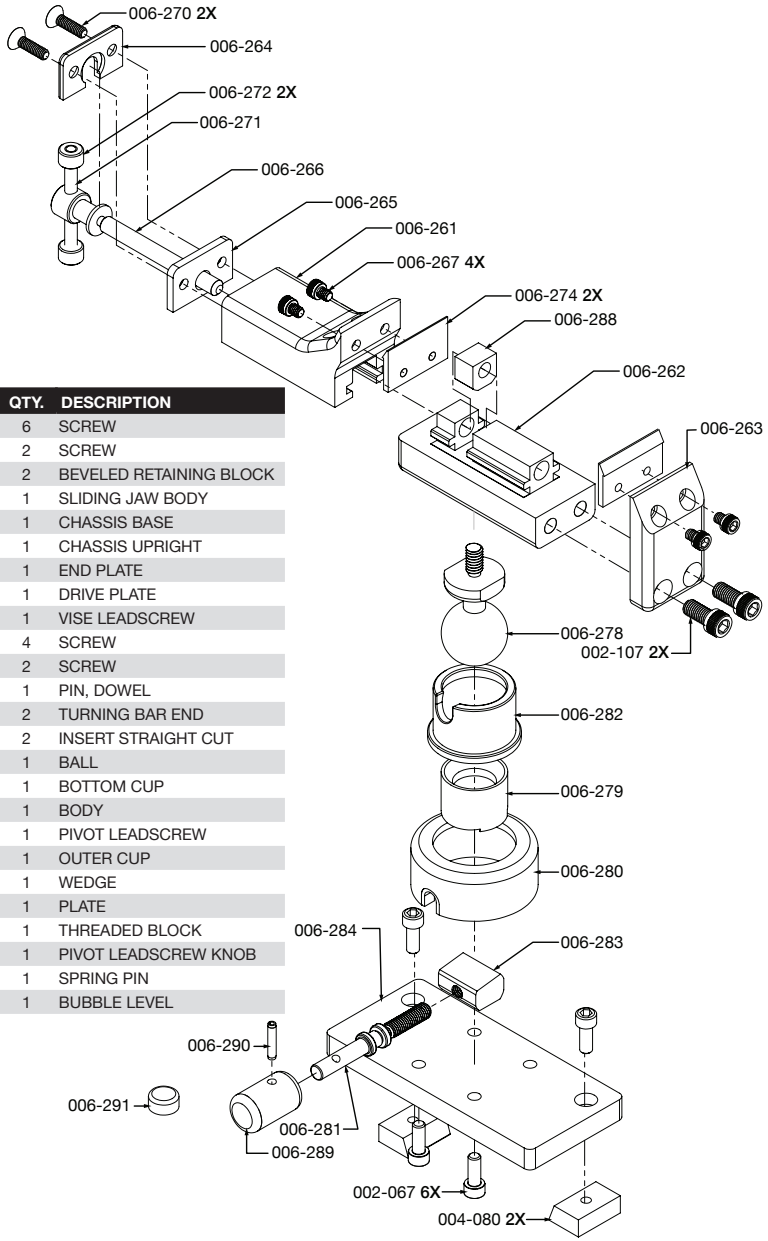

PART NO.	QTY.	DESCRIPTION
002-067	6	SCREW
002-107	2	SCREW
004-080	2	BEVELED RETAINING BLOCK
006-261	1	SLIDING JAW BODY
006-262	1	CHASSIS BASE
006-263	1	CHASSIS UPRIGHT
006-264	1	END PLATE
006-265	1	DRIVE PLATE
006-266	1	VISE LEADSCREW
006-267	4	SCREW
006-270	2	SCREW
006-271	1	PIN, DOWEL
006-272	2	TURNING BAR END
006-274	2	INSERT STRAIGHT CUT
006-278	1	BALL
006-279	1	BOTTOM CUP
006-280	1	BODY
006-281	1	PIVOT LEADSCREW
006-282	1	OUTER CUP
006-283	1	WEDGE
006-284	1	PLATE
006-288	1	THREADED BLOCK
006-289	1	PIVOT LEADSCREW KNOB
006-290	1	SPRING PIN
006-291	1	BUBBLE LEVEL

GLENDO LLC
900 Overlander Road • Emporia, KS 66801 USA
800-835-3519 • 620-343-1084 • Fax: 620-343-9640
grs@grstools.com • www.grstools.com
LIT-594 Last Updated: 08/18/2026